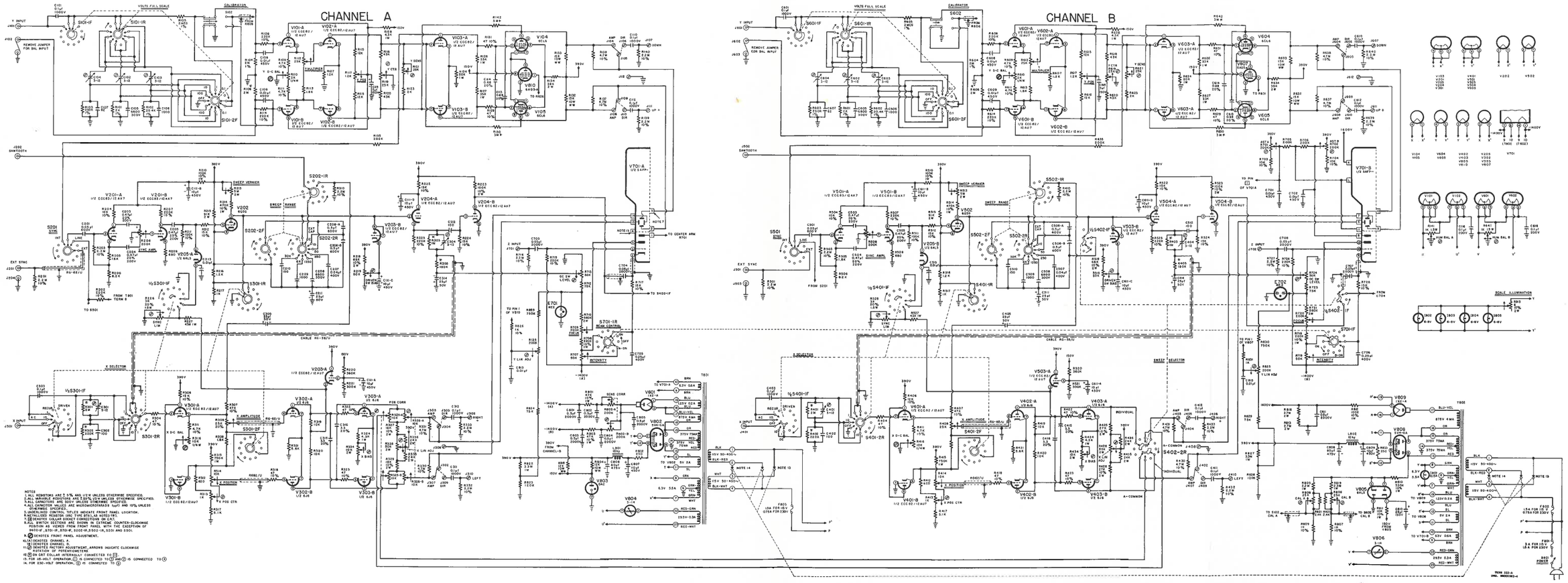

NOTES
1. ALL RESISTORS ARE 5 % AND 1/2 W UNLESS OTHERWISE SPECIFIED.
2. ALL VARIABLE RESISTORS ARE 2.50% 1/2 W UNLESS OTHERWISE SPECIFIED.
3. ALL CAPACITORS ARE 500V UNLESS OTHERWISE SPECIFIED.
4. ALL CAPACITOR VALUES ARE MICROMICROFARADS (μμf) AND 10% UNLESS OTHERWISE SPECIFIED.
5. UNDERLINED CONTROL TITLES INDICATE FRONT PANEL LOCATION.
6. METALLIZED RESISTOR (IRC TYPE BTS), AS NOTED (B).
7. ⊠ DENOTES COLLAR SOCKET CONNECTIONS ON CAT.
8. ALL SWITCH SECTIONS ARE SHOWN IN CEREMONIAL CLOCKWISE POSITION AS VIEWED FROM FRONT PANEL WITH THE EXCEPTION OF 9401-1F, 3701-1F, 3701-1R, 3202-1R, 3502-1R, 3201 AND 3501.
9. ⊘ DENOTES FRONT PANEL ADJUSTMENT.
10. (A) DENOTES CHANNEL A.
11. (B) DENOTES CHANNEL B.
12. ⊘ DENOTES FACTORY ADJUSTMENT, ARROWS INDICATE CLOCKWISE ROTATION OF POTENTIOMETERS.
13. ⊠ ON CAT COLLAR INTERNALLY CONNECTED TO ⊠.
14. FOR 115-VOLT OPERATION, ⊠ IS CONNECTED TO ⊠ AND ⊠ IS CONNECTED TO ⊠.
15. FOR 230-VOLT OPERATION, ⊠ IS CONNECTED TO ⊠.